slide

manufacturer

Walton®

WECHAT CONTACT

WALITON HARDWARE PRODUCTS CO., LTD (Mainland)
QINGCAOWO INDUSTRIAL ZONE, ZHENLONG TOWN, HUIZHOU CITY
GUANGDONG PROVINCE, CHINA

HONG KONG WALITON TRADE LIMITED (HK)
FLAT/RM 1302 13F, CRE BUILDING 303 HENNESSY ROAD, WANCHAI, HK

Web: Https://www.walitonslide.com

T: 0086 752 3958758
M: 0086 13923808751
Fax: 0086 752 3951259
Email: 1@walitonslide.com
Whatsapp: 008613560788649
Postcode: 516227

Walton®

Professional Slide Manufacturer

Product Brochure

Company Profile

Huizhou Waliton Hardware Co, Ltd. is specializing in the manufacturing of ball bearing slides. Our products are widely used in steel, board and wooden furniture of bedroom series, guest room series, dining room series, office series, study series and in various items needing drawing and pulling.

Our factory is set up with the most up to date production equipment, exquisite technology, adopted imported cold rolled steel and galvanized steel material. We devote ourselves to provide high-quality products and services for our customers. The product quality lives up to the international and the same trade standards. We mainly sell our products to customers in Europe, America, the Middle East and Japan. We cooperate with our customers.

We will sincerely cooperate with our customers and advance together with them.

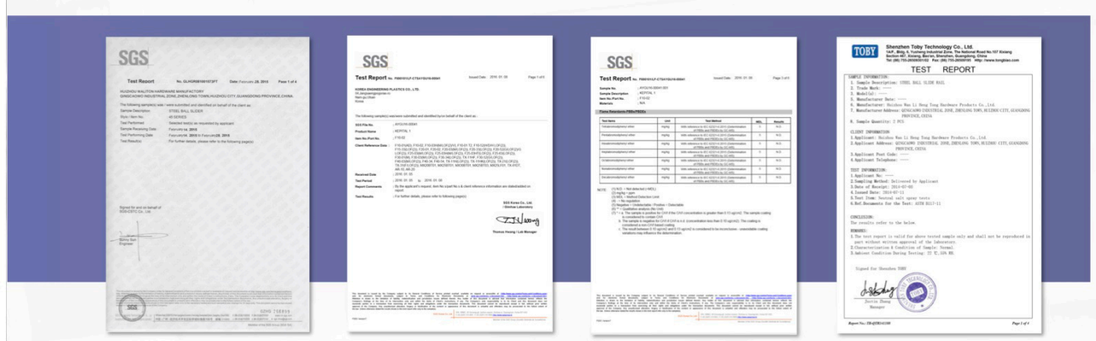

1@walitonslide.com www.walitonslide.com

Walton®

Professional Slide Manufacturer

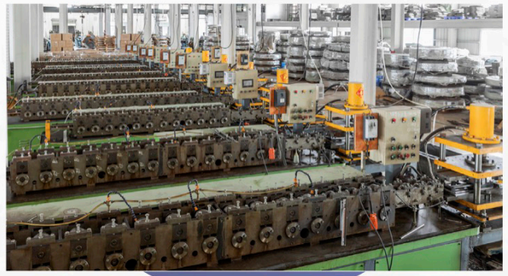

WLT- 45017 Thicker Support Full Extension Drawer Slide

SPECIFICATION

Extension	100% or over travel
Load Rating	100 LBS, 45 kg (18”)
Size	250 - 800 mm
Finish	Clear Zinc, Yellow Zinc, Black Electric Dipping

FEATURES

- “32 mm” hole system
- with trigger release disconnect for easy drawer removal

APPLICATION

- Office Drawers
- Kitchen Cabinets
- Homeroom Drawers

THICKNESS RANGE			
1	1.2	1.0	1.2
2	1.2	1.0	1.2
3	1.4	1.2	1.2

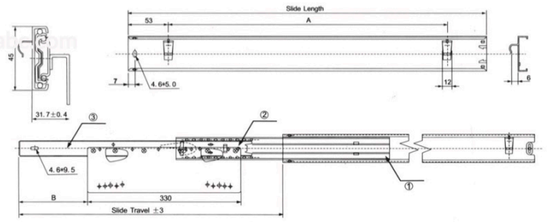

www.sh-al.com

WLT - 45003

WLT - 45001

WLT - 45002

WLT - 45009

WLT - 45010A

WLT - 45010B

WLT - 45018

WLT - 45020A Full Extension Soft-closing Slide

SPECIFICATION

Extension	100% or over travel
Load Rating	100 LBS, 45 kg (18”)
Size	250 - 800 mm
Finish	Clear Zinc, Yellow Zinc, Black Electric Dipping

FEATURES

- “32 mm” hole system
- with trigger release disconnect for easy drawer removal

APPLICATION

- Office Drawers
- Kitchen Cabinets
- Homeroom Drawers

THICKNESS RANGE			
1	1.2	1.0	1.2
2	1.2	1.0	1.2
3	1.4	1.2	1.2

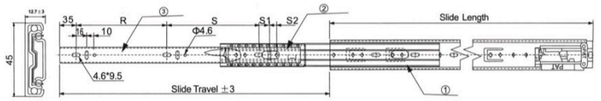

WLT - 45019A
Self-closing slide

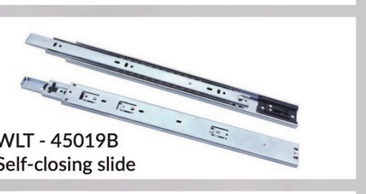
WLT - 45019B
Self-closing slide

WLT - 45020B
Soft-closing slide

WLT - 45021
Push-to-open slide

WLT - 45022

WLT - 45023

WLT - 45027

WLT - 45028

WLT - 45027 Thicker Support Full Extension Drawer Slide

SPECIFICATION

Extension	100% or over travel
Load Rating	100 LBS, 45 kg (18”)
Size	250 - 800 mm
Finish	Clear Zinc, Yellow Zinc, Black Electric Dipping

FEATURES

- “32 mm” hole system
- with trigger release disconnect for easy drawer removal

APPLICATION

- Office Drawers
- Kitchen Cabinets
- Homeroom Drawers

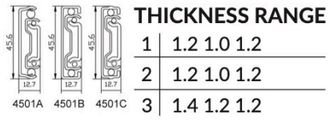

THICKNESS RANGE	
1	1.2 1.0 1.2
2	1.2 1.0 1.2
3	1.4 1.2 1.2

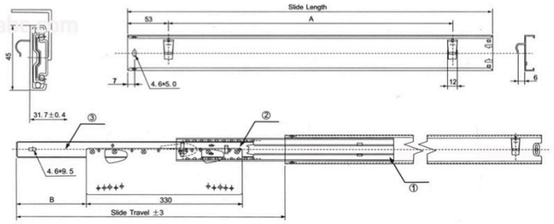

WLT - 45030

WLT - 45031

WLT - 45032

WLT - 45033

WLT - 45029
Soft-closing slide

WLT - 45011
Soft-closing slide

WLT - 45016

WLT - 45034

WLT - 35004 Pocket Door Slide

THICKNESS RANGE	
1	1.2 1.2 1.4
2	1.2 1.4 1.4

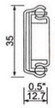

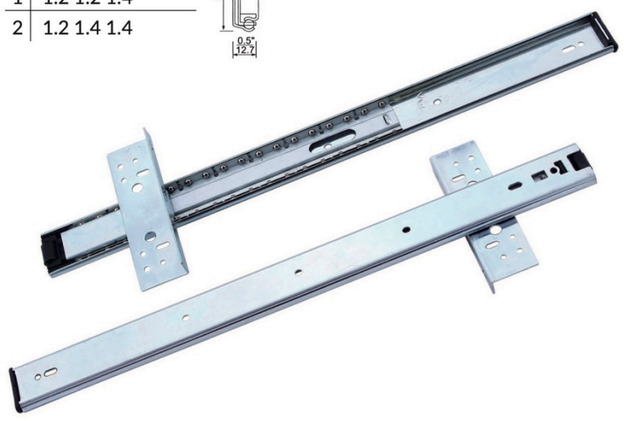

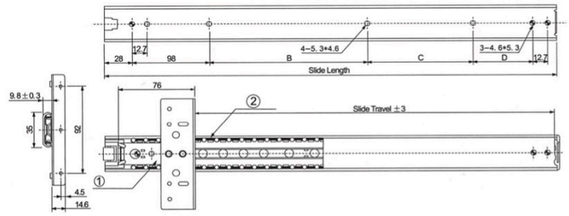

SPECIFICATION

Load Rating	33 LBS, 15 kg (18”)
Size	250 - 700 mm
Finish	Clear Zinc, Yellow Zinc, Black Electric Dipping

FEATURES

- overtop or side open
- pocket door slide install
- with wooden strip to make sure every slide moves together

APPLICATION

- Concealed Door on Entertainment Centers
- File and Storage System

WLT - 35020B

WLT - 35019A

WLT - 35020A

WLT - 35019B

WLT - 35007

WLT - 35009

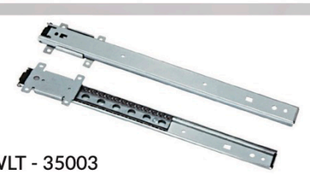

WLT - 35003

WLT - 35027

WLT - 35017 Heavy Duty Full Extension File Drawer Slide

SPECIFICATION

Extension	100% or over travel
Load Rating	132 LBS, 6o kg, (18")
Size	250 - 700 mm
Material	Hardened Cold Rolled Steel
Finish	Clear Zinc, Yellow Zinc, Black Electric Dipping

FEATURES

- full drawer travel with lift-off disconnect utilizing mounting rail system
- the synchronized movement of rails

APPLICATION

- Kitchen Furniture
- Office/ Home Furniture Drawers

THICKNESS RANGE	
1	1.2 1.2 1.4
2	1.2 1.4 1.4

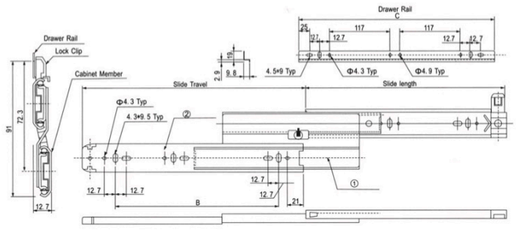

WLT - 35015

WLT - 35027-2

WLT - 35030

WLT - 35031
Soft-closing slide

WLT - 35032

WLT - 35022

WLT - 35033-2

WLT - 35035

WLT - 27010 Trouser Rack Slide

THICKNESS RANGE	
1	1.2 1.0
2	1.2 1.0

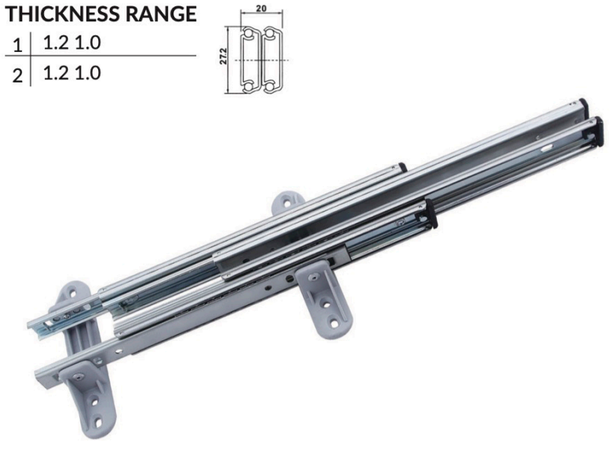

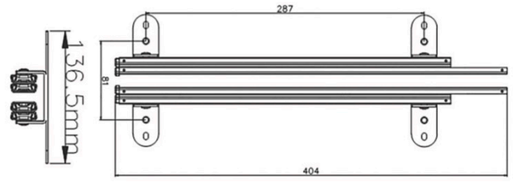

SPECIFICATION

Extension	100% or over travel
Load Rating	15 kg
Size	250 - 600 mm
Material	Hardened Cold Rolled Steel
Finish	Clear Zinc, Yellow Zinc, Black Electric Dipping

FEATURES

- easy installation
- full use of wardrobe space

APPLICATION

- Trousers Rack
- Shoe Rack

WLT - 39005

WLT - 35008

WLT -35016

WLT - 35040

WLT - 35041

WLT - 36030

WLT - 27005 Double Extension Slide

SPECIFICATION

Extension	**75%**
Load Rating	33 LBS, 15 kg
Size	250 - 600 mm
Material	Hardened Cold Rolled Steel
Finish	Clear Zinc, Yellow Zinc, Black Electric Dipping

FEATURES

- 32 mm hole system
- drop on mounting can be secured with mounting for permanent mounting

APPLICATION

- Kitchen Cabinets
- Bedroom Cabinets
- Dining Room Cabinets

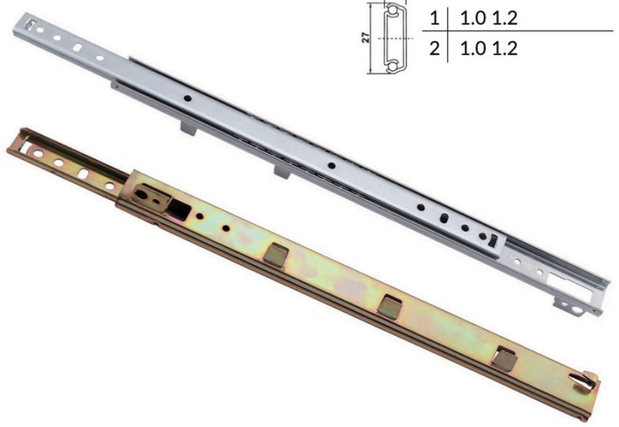

THICKNESS RANGE

1	1.0 1.2
2	1.0 1.2

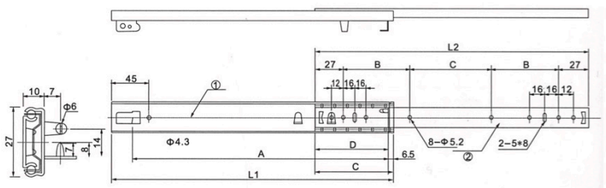

WLT - 27006A

WLT - 27009-2
Shrapnel slide

WLT - 27007

WLT - 27008

WLT - 27009-1
Shrapnel slide

WLT - 27006B

WLT - 27012A

WLT - 27012B

WLT - 27024 Single Extension Bottom Mount Slide

THICKNESS RANGE

1	1.2 1.0
2	1.2 1.0

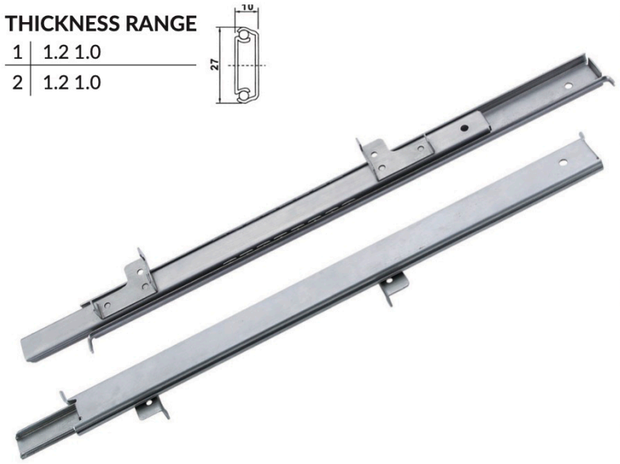

SPECIFICATION

Extension	75%
Load Rating	33 LBS, 15 kg
Size	250 - 500 mm
Material	Hardened Cold Rolled Steel
Finish	Clear Zinc, Yellow Zinc, Black Electric Dipping

FEATURES

- 32 mm hole system
- simple bottom mounting tabs

APPLICATION

- Shallow Desk Drawers
- Computer Keyboard Trays
- Pull-out Trays

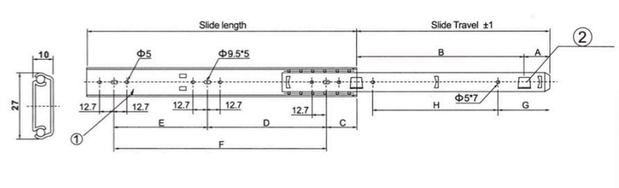

WLT - 27013

WLT - 27009-3
Shrapnel slide

WLT - 27017

WLT - 27001

WLT - 27018

WLT -27025

WLT -27003

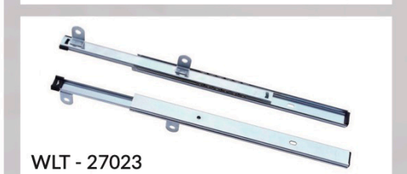
WLT - 27023

WLT - 17015 Doule Single Extention Slide

SPECIFICATION

Extension	100%
Load Rating	33 LBS, 15 kg
Size	200 - 500 mm
Material	Hardened Cold Rolled Steel
Finish	Clear Zinc, Yellow Zinc, Black Electric Dipping

THICKNESS RANGE

1	1.0
2	1.0

FEATURES

- 32 mm hole system
- simple bottom mounting tabs

APPLICATION

- Shallow Desk Drawers
- Computer Keyboards Trays
- Pull-out Trays

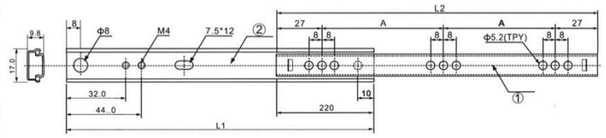

WLT - 17005

WLT - 17006

WLT - 17008

WLT - 17001

WLT - 17011

WLT - 17003
Shrapnel slide

WLT - 17004

WLT - 17007

Walton®
Professional Slide Manufacturer

WLT-Txx01 Double Extension Table Slide

SPECIFICATION

Load Rating 165 LBS, 75 kg

Size 450-1500 mm

Material Hardened Cold Rolled Steel

Finish Clear Zinc, Yellow Zinc, Black Electric Dipping

FEATURES

- two-way sliding
- in-separate

APPLICATION

- Dining Table

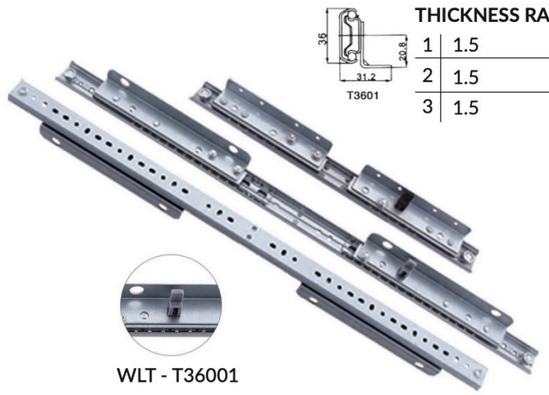

THICKNESS RANGE	
1	1.5
2	1.5
3	1.5

WLT - T36001

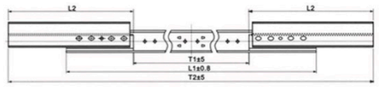

WLT - T3510

WLT - T39001

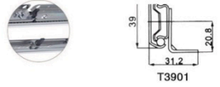

THICKNESS RANGE		
1	1.5	2.5
2	1.5	2.5
3	1.5	2.5

WLT - T35002

WLT - T35004

WLT - T39001

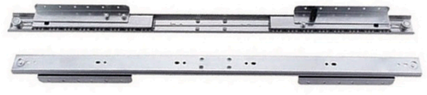

THICKNESS RANGE	
1	2.0
2	2.0
3	2.0

WLT - T47008

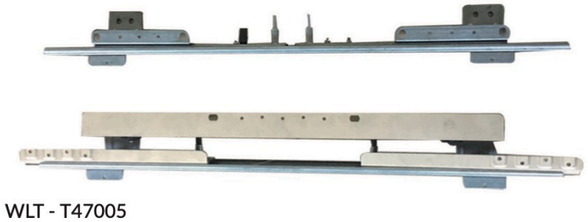

WLT - T47005

WLT - TL003/TL001 Aluminium Alloy Table Slide

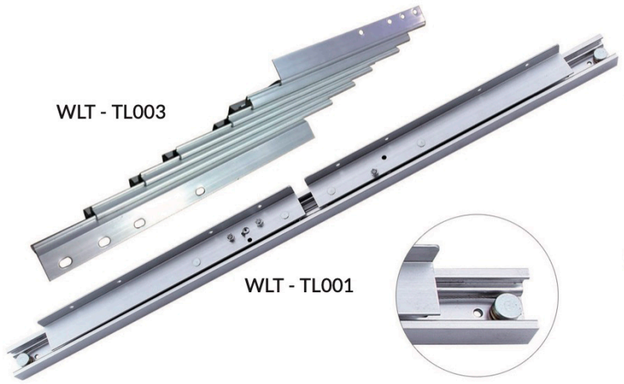

SPECIFICATION

Extension 100%

Load Rating 33 LBS, 15 kg

Size 50 kg (26")

Material Aluminium Alloy

Finish Silver White

APPLICATION

- Wood Table
- Glass Table

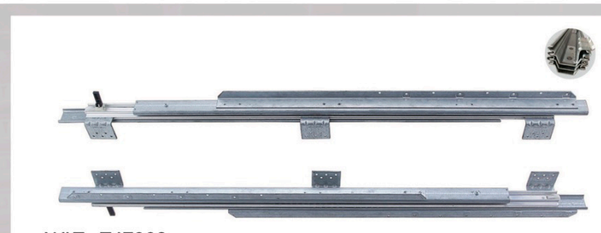

WLT - T47008

WLT - T47005

WLT - T47002

WLT - T4702A

WLT - T4702B

WLT - T47006

WLT - Txx002 Automatic Lifting & Falling Slide

SPECIFICATION

Load Rating	50 kg (30”)
Size	700 - 1600 mm
Material	1.5 mm Cold Board
Finish	Electrophoresis, Clear Zinc Plated

FEATURES

- two-way sliding
- in-separate

APPLICATION

- Wood Table
- Glass Table

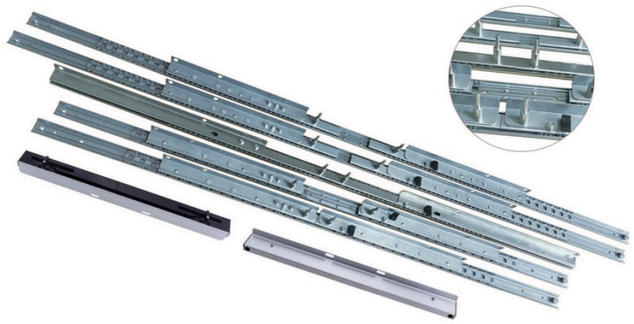

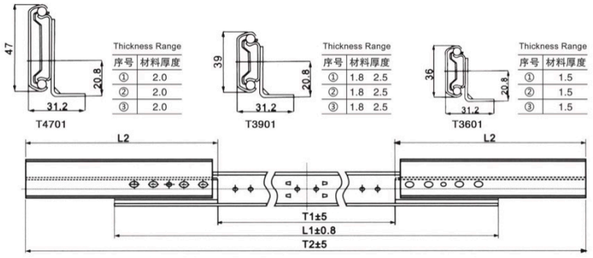

WLT - T47011

WLT - T47012

WLT - T47013

WLT - T47014

WLT - Txx003

WLT - T47010

WLT - 531902 Heavy Duty Full Extension Drawer Side

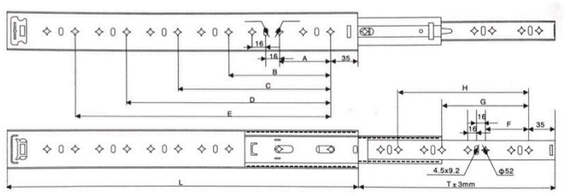

SPECIFICATION

Extension	100% or over travel
Load Rating	100 kg (20”)
Size	250 - 1000 mm
Material	Hardened Cold Rolled Steel
Finish	Clear Zinc, Yellow Zinc, Black Electric Dipping

FEATURES

- easy drawer disconnection
- sliced in and out

APPLICATION

- Office Furniture
- Tool Boxes
- Metal Cabinet

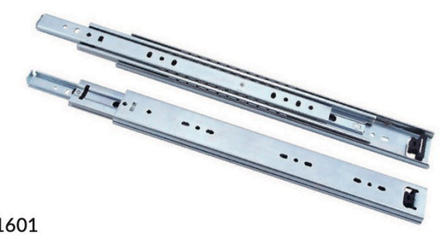

WLT - 531601

WLT - 531901

WLT -531907

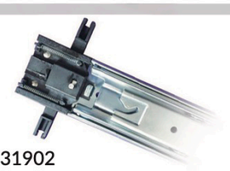

WLT - 531902

WLT - 531903

WLT - 531904

WLT - 531906

WLT - 20001 Full Extension Soft-closing Slide

SPECIFICATION

Extension	100% or over travel
Load Rating	33 LBS, 15 kg
Size	200 - 500 mm
Material	Hardened Cold Rolled Steel
Finish	Clear Zinc, Yellow Zinc, Black Electric Dipping

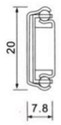

THICKNESS RANGE	
1	1.4
2	1.2

FEATURES

- 32 mm hole system
- simple bottom mounting tabs

APPLICATION

- Shallow Desk Drawers
- Computer Keyboards Trays
- Pull-out Trays

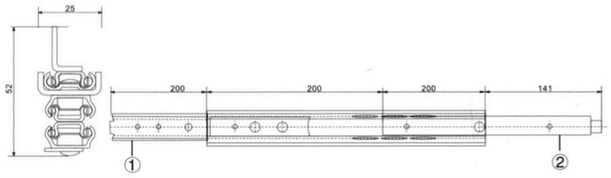

Aluminium Alloy Slide

WLT - 20001-2

WLT - 20002

WLT - 20003

WLT - 20006

WLT - 20007

WLT - 20009

WLT - Y01 Full Extension Concealed Soft Slide for Drawer System

THICKNESS RANGE		
1	1.5	1.5
2	2.0	1.8
3	1.5	1.5

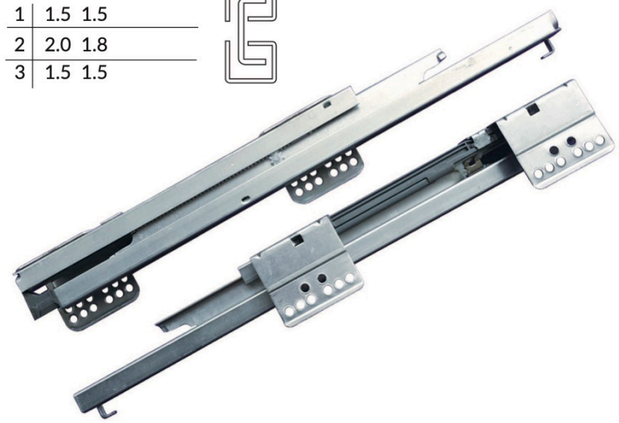

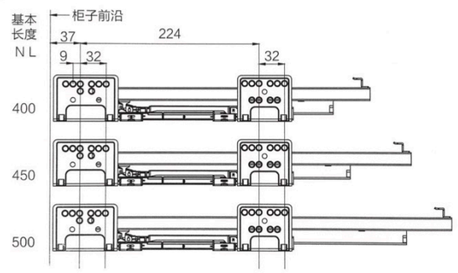

SPECIFICATION

Load Rating	35 kg (450 mm)
Size	250 - 500 mm
Material	Environmental- friendly galvanized sheet
Installation Type	Undermount
Package	10

APPLICATION

- Furniture Cabinet
- Wire Basket
- Kitchen / Bathroom Furniture

WLT - Y01
Full-extension concealed soft slide for a drawer system

WLT - Y03
Single extension concealed push-to-open slide

WLT - Y05
Soft-closing concealed single extension slide

WLT - Y02
Full-extension concealed soft slide

WLT - Y05
Soft-closing concealed single extension slide

WLT - Y04
Full-extension concealed push-to-open slide

WLT - Y06
Full-extension concealed soft slide

WLT - Y07